WIMEX s.r.o.
Broumovská 72
CZ-547 01 Náchod
Tel.: +420 491 480 048
info.cz@wimex.eu

Identification: 49286081
VAT number: CZ49286081

Registered: Krajský soud
Hradec Králové, odd. C vl. 4420

Product data sheet

Item number: **70790**
Item name: **Napkin (PAP FSC Mix) 3-ply gold 33 x 33 cm [20 pcs]**

Item

Length:	33 cm			Grammage:	45 g/m²
Width/ diameter:	32,8 cm	Color:	gold		
		Material 1:	Paper - FSC Mix		
Height:	0,1 cm				
Weight:	4,87 g				

Customs nomenclature: 48183000

Package

Length:	16,5 cm	No. of pieces in a package:	20 pcs
Width/ diameter:	16,5 cm	Weight:	100 g
		LOT:	YES
Height:	2,5 cm	EAN:	8591199707907

Packaging material: Polyprophylene (PP)
Packaging type: Sealed bag

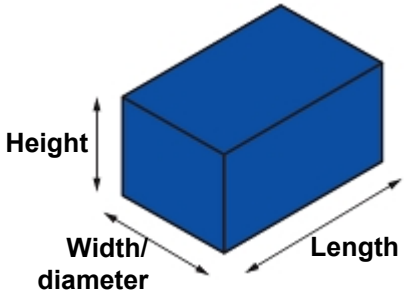

Group packaging

Carton

Length:	33 cm	No. of packages in a carton:	12 pkg.
Width/ diameter:	17,5 cm	No. of pieces in a carton:	240 pcs
		Weight:	1,35 kg
Height:	17,5 cm	Volume:	0,01 m3
		EAN:	4052509707900
		LOT:	N/A

Packaging material: Paper - corrugated cardboard (PAP)
Packaging type: Corrugated box

No. of packages in a carton:

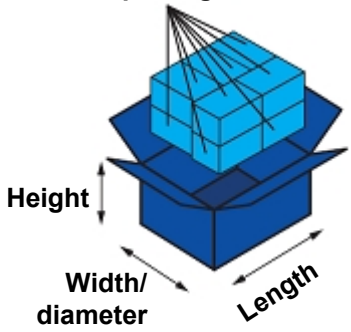

Pallet

Layer height:	17,5 cm	Height:	207 cm
Number of layers:	11	Weight:	229 kg
No. of cartons on the layer:	14	No. of cartons on the pallet:	154 ctn
		No. of packages on the pallet:	1848 pkg.
		No. of pieces on the pallet:	36960 pcs

No. of cartons on the layer:

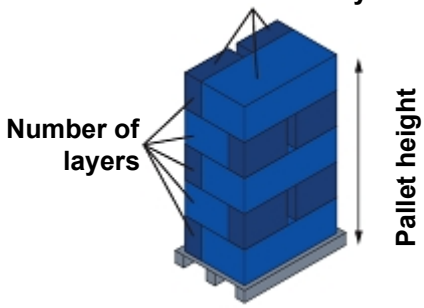

06.10.2025